TRICONTINENT™
HANDLING LIQUIDS...PRECISELY

# LT-Series Pump Specifications

## 250 µL (Catalog # 386)

| | |
|---|---|
| Pump Type | Positive displacement syringe pump |
| Step Resolution | 0.150 µL/full step |
| Imprecision (full stroke) | ≤0.05% CV |
| Inaccuracy (full stroke) | ≤1.0% syringe volume |
| Dimensions | 2.12" W x 5.90" H x 2.62" D (max.)<br>53.85 mm x 149.86 mm x 66.55 mm |
| Syringe Data | |
| Bore | 0.1721" (4.37 mm) |
| Stroke | 0.667" (16.93 mm) |
| Material | PPS, Borosilicate Glass, UHMWPE, Viton® |
| Fluid Backpressure | 30 PSI max. |
| Interface | 1/4-28 female port |
| Motor/Leadscrew Data | |
| Step Angle | 1.8° |
| Travel/Step | 0.0004" (0.01 mm) per full step |
| Resistance/Phase | 3.5 Ω |
| Inductance/Phase | 4.0 mH |
| Rated Current | 900 mA |
| Rated Voltage | 3.2 V* |
| Limit Sensor Data | |
| Type | Optoschmitt (Honeywell HOA6990) |
| Diode Current | 15 mA typical |
| Environmental | |
| Temperature (operating) | 15°C to 45°C |
| Humidity (operating) | 10-85% RH (non-condensing) |

*Pump should typically be driven with a 24 VDC bipolar chopper drive, ½ step, at rated current. Higher voltage may be required at higher step rates.

# 250 µL ENVELOPE AND MOUNTING DRAWING

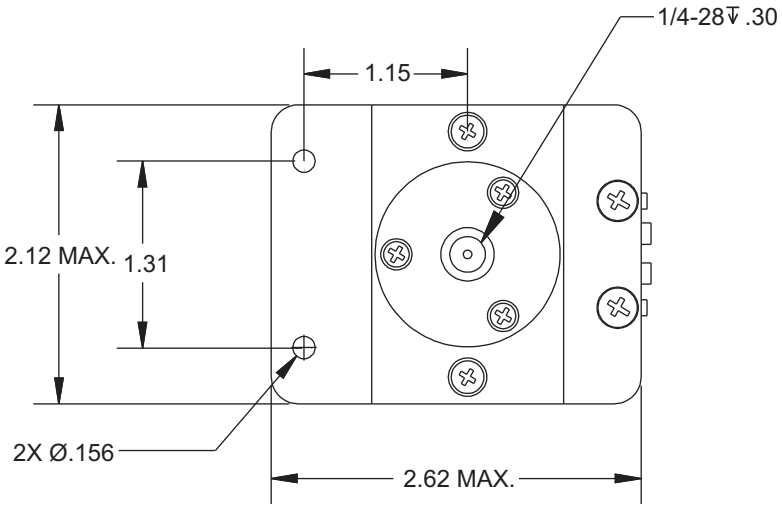


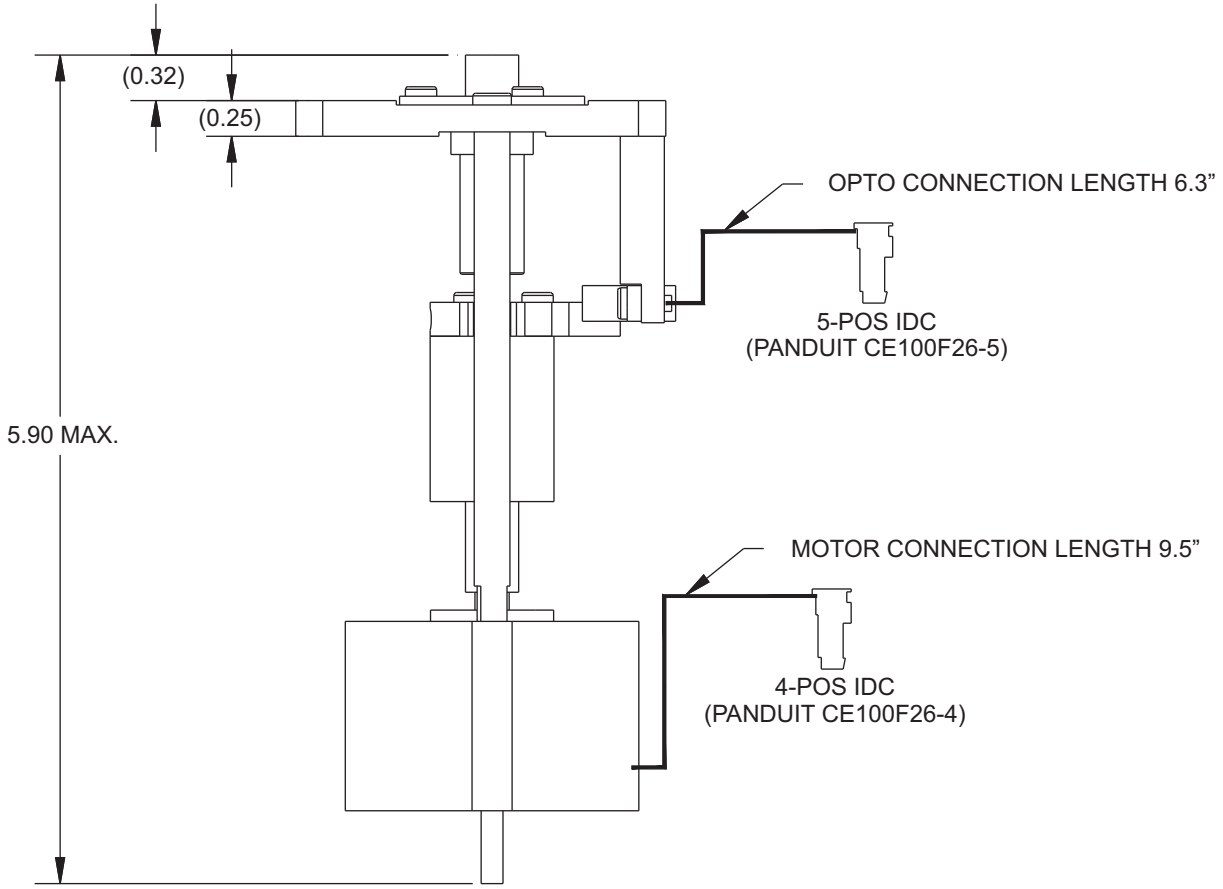


TriContinent
12555 Loma Rica Drive Grass Valley, CA 95945
Tel: (800) 937-4738 or (530) 273-8888 Fax: (530) 273-2586
Email: liquidhandling@tricontinent.com Web: www.tricontinent.com