TRICONTINENT™
HANDLING LIQUIDS...PRECISELY

LT-Series Pump Specifications

2.5 mL (Catalog # 389)

Pump Type	Positive displacement syringe pump
Step Resolution	1.500 µL/full step
Imprecision (full stroke)	≤0.05% CV
Inaccuracy (full stroke)	≤1.0% syringe volume
Dimensions	2.12" W x 5.90" H x 2.62" D (max.) 53.85 mm x 149.86 mm x 66.55 mm
Syringe Data	
Bore	0.5441" (13.82 mm)
Stroke	0.667" (16.93 mm)
Material	PPS, Borosilicate Glass, UHMWPE, Viton®
Fluid Backpressure	10 PSI max.
Interface	1/4-28 female port
Motor/Leadscrew Data	
Step Angle	1.8°
Travel/Step	0.0004" (0.01 mm) per full step
Resistance/Phase	3.5 Ω
Inductance/Phase	4.0 mH
Rated Current	900 mA
Rated Voltage	3.2 V*
Limit Sensor Data	
Type	Optoschmitt (Honeywell HOA6990)
Diode Current	15 mA typical
Environmental	
Temperature (operating)	15°C to 45°C
Humidity (operating)	10-85% RH (non-condensing)

*Pump should typically be driven with a 24 VDC bipolar chopper drive, ½ step, at rated current. Higher voltage may be required at higher step rates.

2.5 mL ENVELOPE AND MOUNTING DRAWING

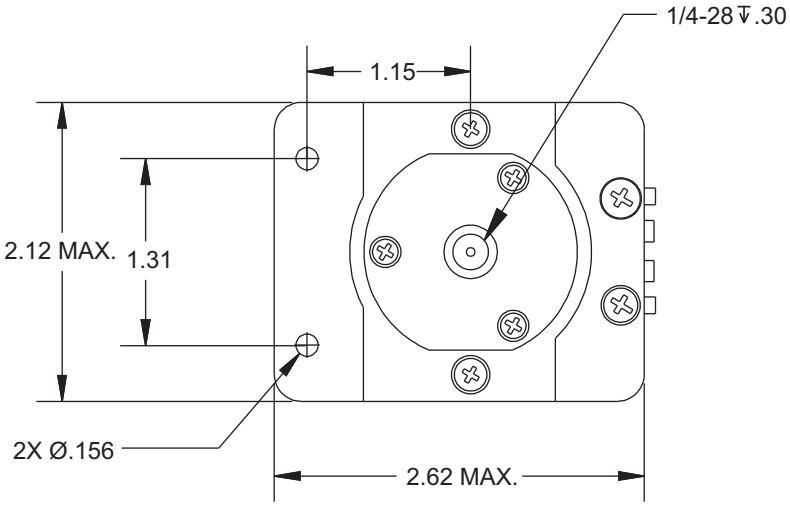

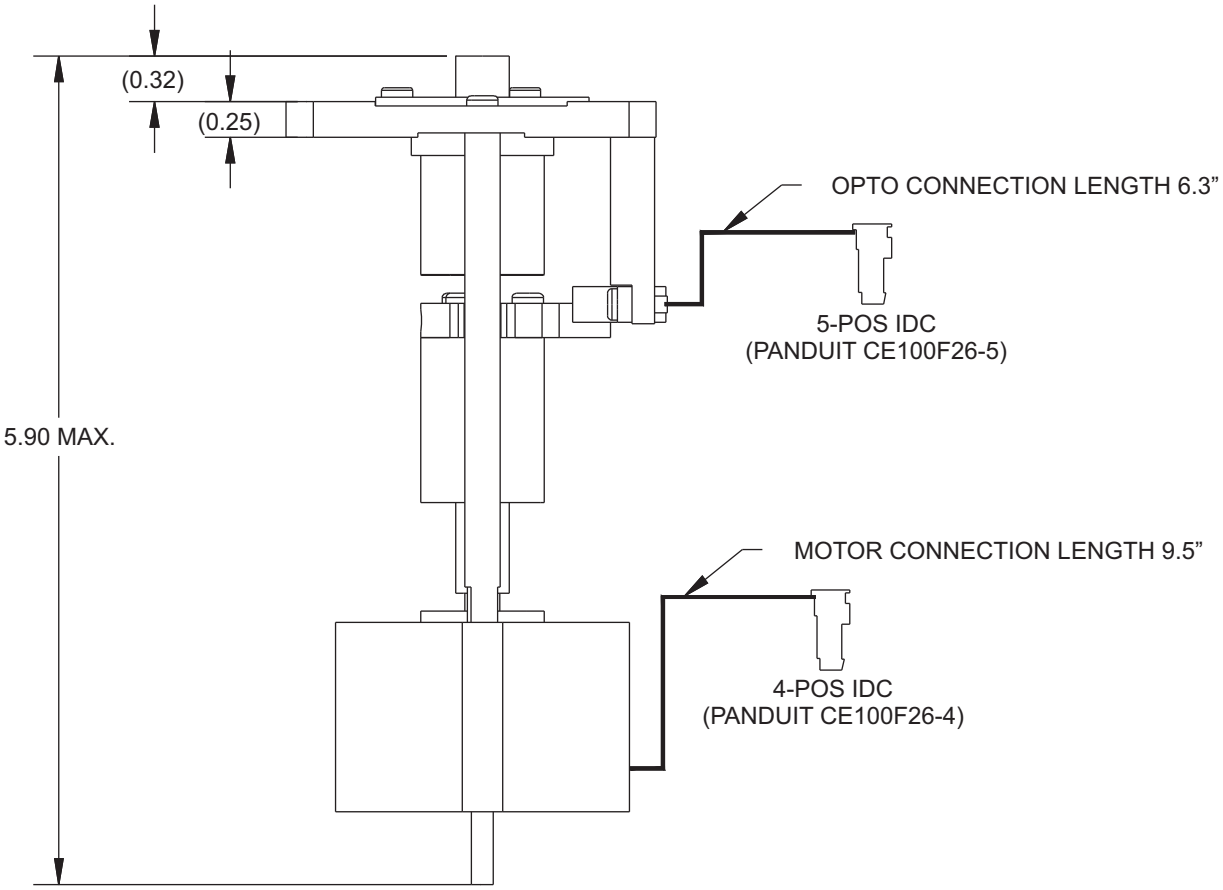

TriContinent
12555 Loma Rica Drive Grass Valley, CA 95945
Tel: (800) 937-4738 or (530) 273-8888 Fax: (530) 273-2586
Email: liquidhandling@tricontinent.com Web: www.tricontinent.com